EXP : REALIZATION OF THE INTERNAL ARCHITECTURE OF 2 BIT COMPARATOR CIRCUIT

Objective :

1. To design a 2 bit comparator circuit using basic gates
2. To verify the truth table of a 2 bit comparator

Theory :

A magnitude comparator is a combinational circuit that compares the magnitude of two numbers (A and B) and generates one of the following outputs: A=B , A<B, A>B. A 2 bit comparator compares two binary numbers, each of two bits and produces their relation such as one number is equal to or greater than or less than the other. The first number A is designated as A=A1A0 and the second number is designated as B=B1B0. This comparator produces three outputs: A>B, A=B and A<B. The K-Maps are as follows:

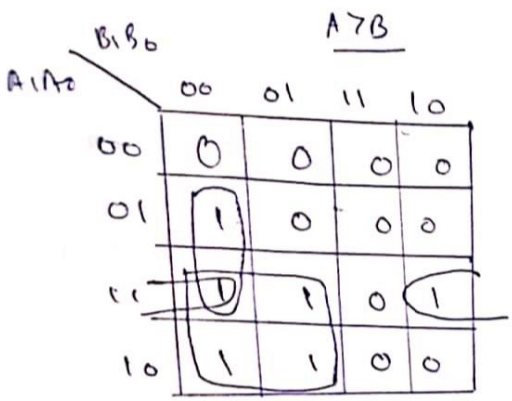

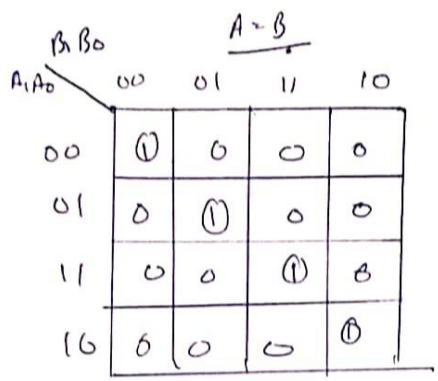

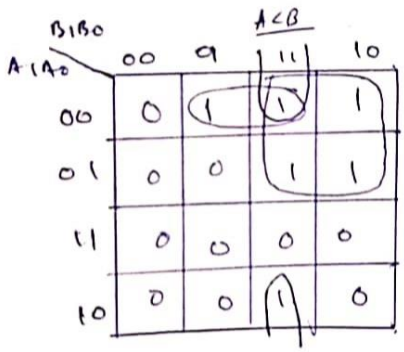

Block Diagram :

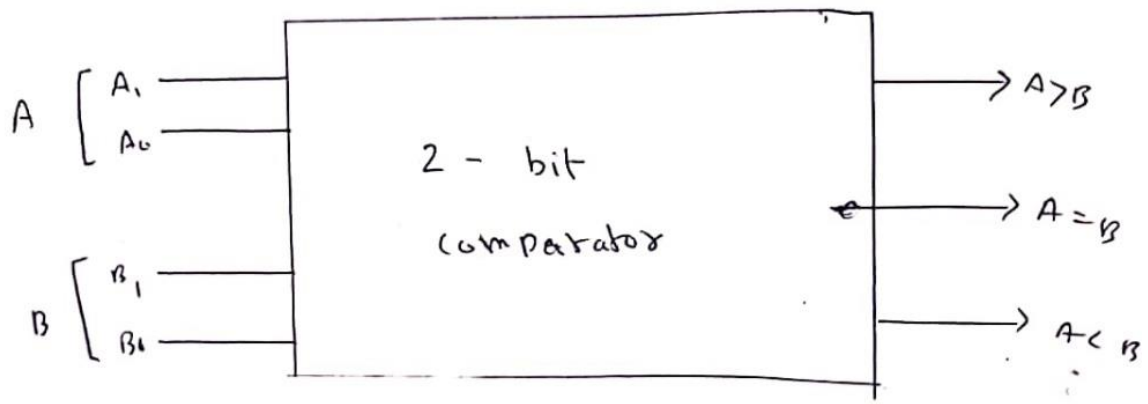

Truth Table :

Inputs				Outputs		
A_1	A_0	B_1	B_0	A>B	A = B	A < B
0	0	0	0	0	1	0
0	0	0	1	0	0	1
0	0	1	0	0	0	1
0	0	1	1	0	0	1
0	1	0	0	1	0	0
0	1	0	1	0	1	0
0	1	1	0	0	0	1
0	1	1	1	0	0	1
1	0	0	0	1	0	0
1	0	0	1	1	0	0
1	0	1	0	0	1	0
1	0	1	1	0	0	1
1	1	0	0	1	0	0
1	1	0	1	1	0	0
1	1	1	0	1	0	0
1	1	1	1	0	1	0

Logical Expression :

From the K-maps,

$$A > B : A_0\bar{B}_1\bar{B}_0 + A_1\bar{B}_1 + A_1A_0\bar{B}_0$$

$$A = B : \bar{A}_1\bar{A}_0\bar{B}_1\bar{B}_0 + \bar{A}_1A_0\bar{B}_1B_0 + A_1A_0B_1B_0 + A_1\bar{A}_0B_1\bar{B}_0$$

$$= \bar{A}_1\bar{B}_1(\bar{A}_0\bar{B}_0 + A_0B_0) + A_1B_1(A_0B_0 + \bar{A}_0\bar{B}_0)$$

$$= (\bar{A}_1\bar{B}_1) + A_1B_1)(A_0B_0 + \bar{A}_0\bar{B}_0)$$

$$= (A_0 \text{ EX-NOR } B_0)(A_1 \text{ EX NOR } B_1)$$

$$A < B = \bar{A}_1B_1 + \bar{A}_0B_1B_0 + \bar{A}_1\bar{A}_0B_0$$

Circuit Diagram :

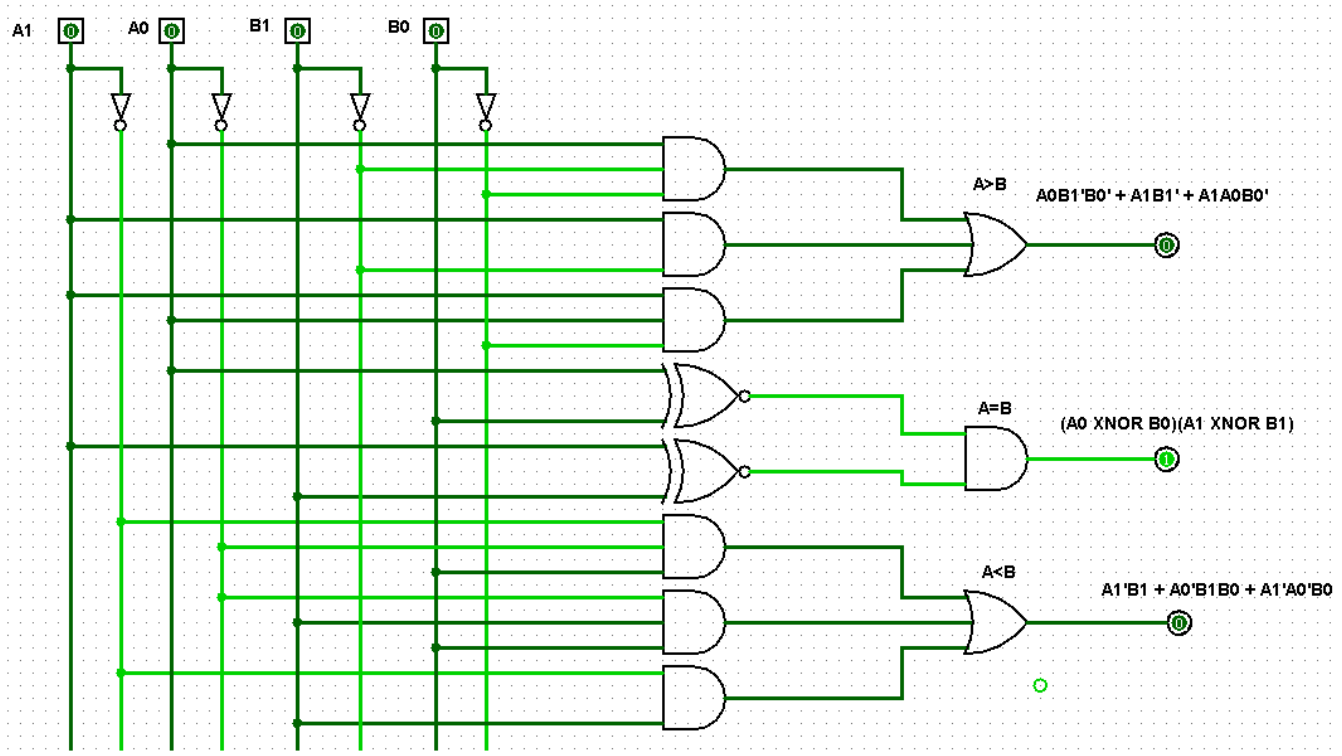

Conclusion :

By using the logical expressions (which we have derived from the K-Maps), we have implemented a logic circuit which works as a 2 bit comparator and compares two 2 bit binary numbers.